ARBORVITAE TO MIMOSA SIDEWALK
TOWN OF PINE KNOLL SHORES
PINE KNOLL SHORES, NORTH CAROLINA

CARTERET COUNTY

Title	Drawing Number
COVER SHEET	C1 OF 7
SIDEWALK CENTERLINE PLAN & PROFILE STA 0+00 - 5+20	C2 OF 7
SIDEWALK CENTERLINE PLAN & PROFILE STA 5+20 - END	C3 OF 7
SECTION VIEWS - SHEET 1 OF 3	C4 OF 7
SECTION VIEWS - SHEET 2 OF 3	C5 OF 7
SECTION VIEWS - SHEET 3 OF 3	C6 OF 7
DETAILS	C7 OF 7

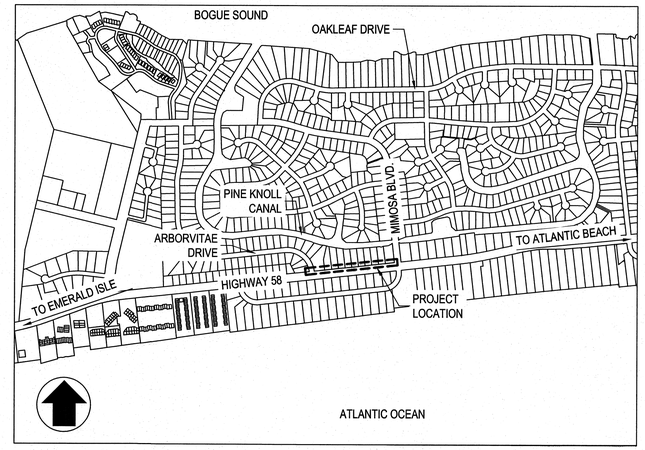

VICINITY MAP N.T.S.

PROJECT DATA

NAME OF PROJECT:
TOWN OF PINE KNOLL SHORES
ARBORVITAE TO MIMOSA SIDEWALK
PINE KNOLL SHORES, NORTH CAROLINA

PREPARED BY:
ARENDELL ENGINEERS
105 NORTH 10TH STREET, SUITE 4
MOREHEAD CITY, NC 28557
PHONE: (252) 622-4338
EMAIL: BILL@ARENDELLENGINEERS.COM

OWNER/DEVELOPER:
TOWN OF PINE KNOLL SHORES
BRIAN KRAMER, TOWN MANAGER
100 MUNICIPAL CIRCLE
PINE KNOLL SHORES, NC 28512

SURVEYORS:
JAMES I. PHILLIPS LAND SURVEYING PA
379 ARRINGTON ROAD
BEAUFORT, NC 28516.

DATUMS:
VERTICAL: NAVD88
HORIZONTAL: NC STATE PLANE COORDINATE SYSTEM

ABBREVIATIONS & SYMBOLS

APPROX	APPROXIMATE
ELEV	ELEVATION
EX	EXISTING
N/F	NOW OR FORMERLY
PROP	PROPOSED
STA	STATION
SW	STORMWATER
TYP	TYPICAL
W/	WITH
7.16'	EXISTING ELEVATION
	FIRE HYDRANT
	MAILBOX
	SIGN
	TELEPHONE POLE
	TREE
	UTILITY POST
	WATER METER
	WATER VALVE

SEEDING SCHEDULE

SEED BED PREPARATION	
LIME	2 TONS/AC
10-10-20	1,000 LBS/AC
0-20-0	500 LBS/AC (AFTER SEEDING)
ASPHALT TACK	200 GAL/TON OF MULCH

SEEDING MIXTURE

(FEBRUARY 1 - APRIL 30)	
TALL FESCUE	50 LBS/AC
PENSACOLA BAHIAGRASS	10 LBS/AC
KOREAN OR KOBE LESPEDEZA (SCARIFIED)	50 LBS/AC
(MAY 1 - AUGUST 31)	
TALL FESCUE	50 LBS/AC
WEEPING LOVEGRASS	5 LBS/AC
KOREAN OR KOBE LESPEDEZA (SCARIFIED)	50 LBS/AC
BROWNTOP MILLET	25 LBS/AC
(SEPTEMBER 1 - JANUARY 31)	
TALL FESCUE	60 LBS/AC
KOREAN OR KOBE LESPEDEZA (UNSCARIFIED)	60 LBS/AC
RYE (GRAIN)	25 LBS/AC
FOR SLOPES 2:1 OR STEEPER, ADD 30 LBS/AC SERICEA LESPEDEZA AND 15 LBS WEEPING LOVEGRASS	
LANDSCAPING MIXTURE	
(JANUARY 1 - MARCH 31)	
COMMON BERMUDAGRASS (UNHULLED)	20 LBS/AC
(APRIL 1 - JULY 31)	
COMMON BERMUDAGRASS (HULLED)	12 LBS/AC

811 Know what's below. Call before you dig.

THIS DRAWING IS THE PROPERTY OF ARENDELL ENGINEERS AND IS NOT TO BE REPRODUCED OR USED FOR ANY PROJECT IN WHOLE OR IN PART WITHOUT EXPRESS WRITTEN PERMISSION.

PROJECT MANAGER: JWF
DESIGNED: JJW
DRAWN BY: JJW
CHECKED: JWF
SCALE: AS SHOWN
DATE: 03/07/16

ARENDELL ENGINEERS
CIVIL · COASTAL · ENVIRONMENTAL
105 North 10th Street, Suite 4
Morehead City, NC 28557
(252) 622-4338
Fax: (252) 622-4505
www.arendellengineers.com
North Carolina Certification No. C-1509

OWNER:
TOWN OF PINE KNOLL SHORES
100 MUNICIPAL CIRCLE
PINE KNOLL SHORES, NC 28512

PROJECT:
ARBORVITAE TO MIMOSA SIDEWALK
CARTERET COUNTY, NC

DRAWING:
COVER SHEET

NORTH CAROLINA PROFESSIONAL SEAL 42158 ENGINEER JOHN JOSEPH WADE
05/24/2016

NO.	REVISION	BY	DATE
1	NCDOT COMMENTS	JWF	05/24/16

SHEET NO: C1
OF: 07
JOB NO. 15008

Segment	Start Station	End Station	Bearing	Distance	Radius	Chord Bearing	Chord Distance
1	0+00	0+09.59	N83°46'00.57E	9.59			
2	0+42.06	0+48.04	N83°46'00.57E	5.98			
3	0+48.04	0+55.90		5.90	10'	N55°39'37.29"E	5.81'
4	0+55.90	0+57.32	S38°46'00.57"E	1.42			
5	0+57.32	0+65.17		15.17	10'	N61°16'00.57"E	7.65
6	0+65.17	2+61.66	N83°46'00.57E	196.49			
7	2+61.66	2+65.59		3.93	5'	S73°43'59.43"E	3.83
8	2+65.59	2+68.35	S51°13'59.43"E	2.76			
9	2+68.35	2+72.28		3.93	5'	S73°43'59.43"E	3.83
10	2+72.28	2+78.46	N83°46'00.57E	6.18			
11	2+78.47	2+82.40		3.93	5'	N59°18'30.81"E	4.17
12	2+82.40	2+85.16	N38°47'29.25E	2.76			
13	2+85.16	2+89.09		3.93	5'	N61°16'00.57"E	3.83
14	2+89.09	5+72.29	N83°46'00.57E	283.20			

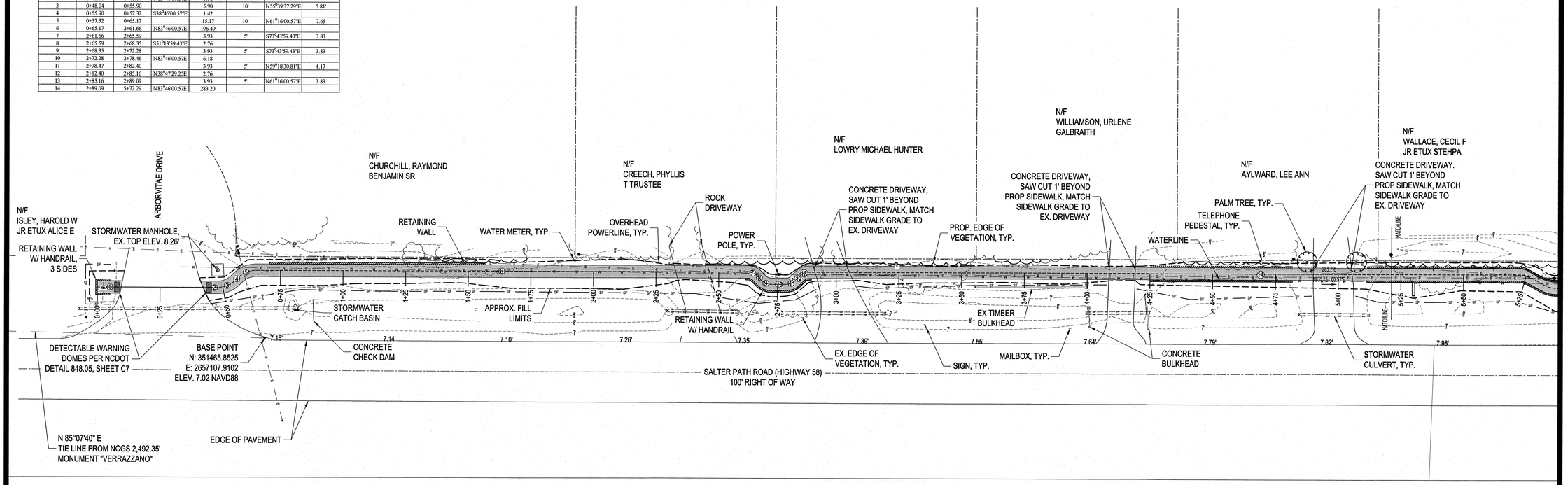

NOTE: GRADE AREAS BEHIND NORTH RETAINING WALLS TO PROVIDE POSITIVE DRAINAGE TO STORMWATER PIPES.

SIDEWALK CENTERLINE - STA 0+00 - 5+20

SCALE: 1" = 20'

SCALE (IN FEET): 20' 0' 20' 40'

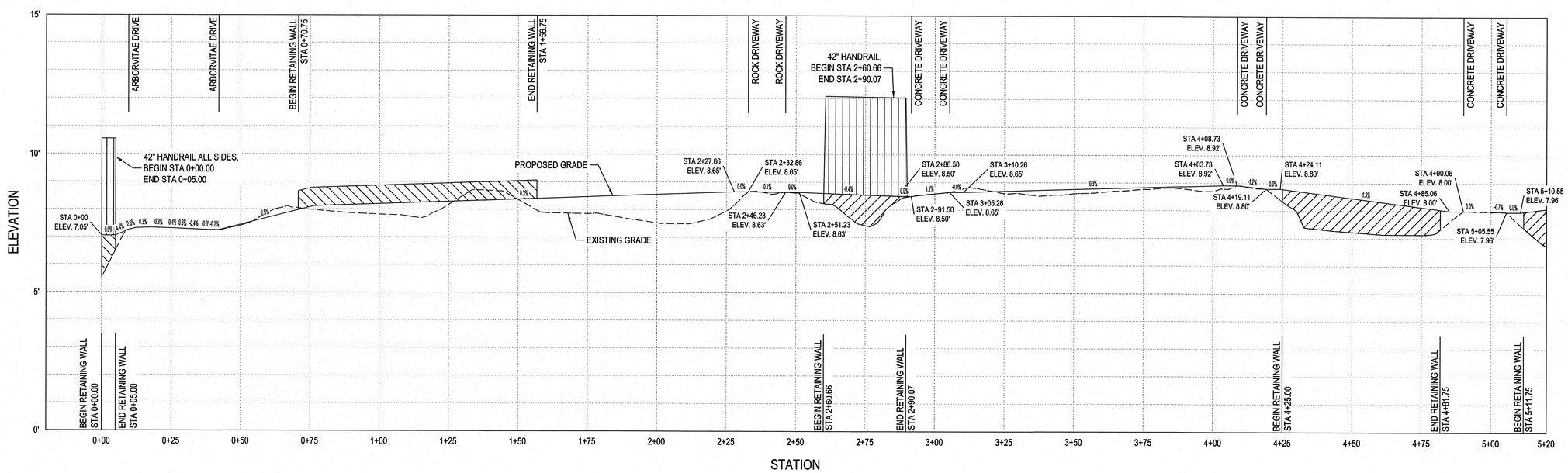

SIDEWALK CENTERLINE PROFILE - STA 0+00 - 5+20

SCALE: H: 1" = 20'; V: 1" = 2'

THIS DRAWING IS THE PROPERTY OF ARENDELL ENGINEERS AND IS NOT TO BE REPRODUCED OR USED FOR ANY PROJECT IN WHOLE OR IN PART WITHOUT EXPRESS WRITTEN PERMISSION.

PROJECT MANAGER: JWF

DESIGNED: JJW

DRAWN BY: JJW

CHECKED: JWF

SCALE: AS SHOWN

DATE: 03/07/16

ARENDELL ENGINEERS
CIVIL · COASTAL · ENVIRONMENTAL
105 North 10th Street, Suite 4
Morehead City, NC 28557
(252) 622-4338
Fax: (252) 622-4505
www.arendellengineers.com
North Carolina Certification No. C-1509

OWNER:

TOWN OF PINE KNOLL SHORES
100 MUNICIPAL CIRCLE
PINE KNOLL SHORES, NC 28512

PROJECT:

ARBORVITAE TO MIMOSA SIDEWALK

CARTERET COUNTY, NC

DRAWING:

SIDEWALK CENTERLINE PLAN & PROFILE STA 0+00 - 5+20

NORTH CAROLINA PROFESSIONAL SEAL 42158 ENGINEER JOHN JOSEPH WADE
05/24/2016

NO.	REVISION	BY	DATE
1	NCDOT COMMENTS	JWF	05/24/16

SHEET NO:

C2

OF: 07

JOB NO. 15008

Segment	Start Station	End Station	Bearing	Distance	Radius	Chord Bearing	Chord Distance
15	5+72.29	5+77.44		5.15	10'	S81°29'23.46"E	5.09'
16	5+77.44	5+82.95	S66°44'47.47"E	5.51			
17	5+82.95	5+88.10		5.15	10'	S81°29'23.45"E	5.09'
18	5+88.10	5+92.01	N83°46'00.57"E	3.91			
19	5+92.01	5+95.16		5.15	10'	N69°0124.59"E	5.09'
20	5+95.16	6+00.67	N54°16'48.61"E	5.51			
21	6+00.67	6+07.81		5.14	10'	N69°0124.59"E	5.09'
22	6+07.81	10+17.46	N83°46'00.57"E	409.65			
23	10+17.46	10+23.12		5.66	10'	S80°01'56.42"E	5.58'
24	10+23.12	10+28.25	S63°49'53.41"E	5.13			

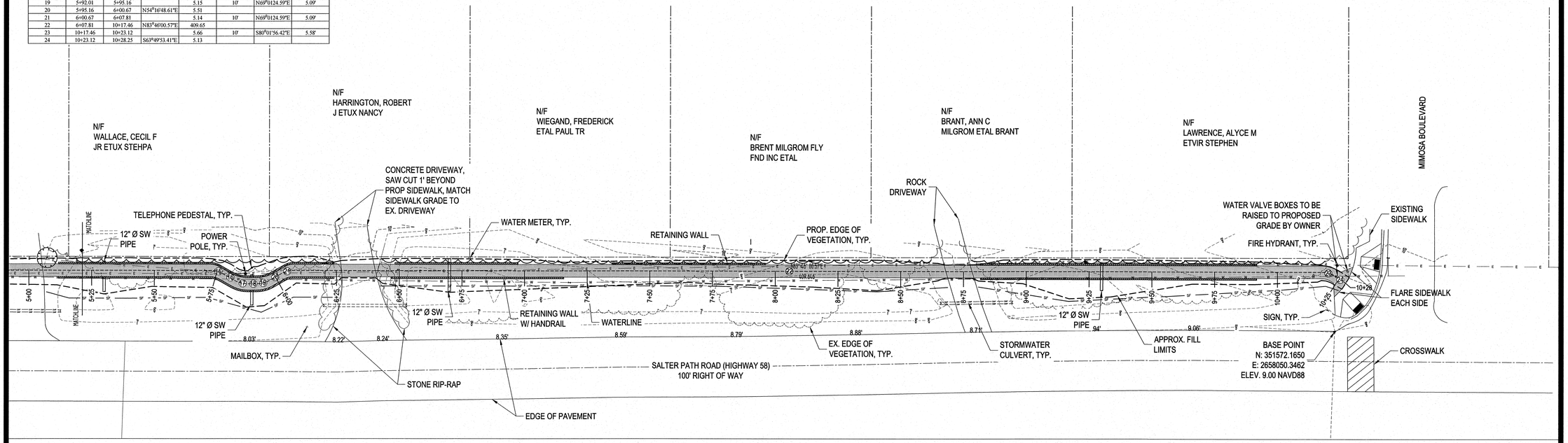

NOTE: GRADE AREAS BEHIND NORTH RETAINING WALLS TO PROVIDE POSITIVE DRAINAGE TO STORMWATER PIPES.

SIDEWALK CENTERLINE PLAN - STA 5+20 - END

SCALE: 1" = 20'

SCALE (IN FEET): 20' 0' 20' 40'

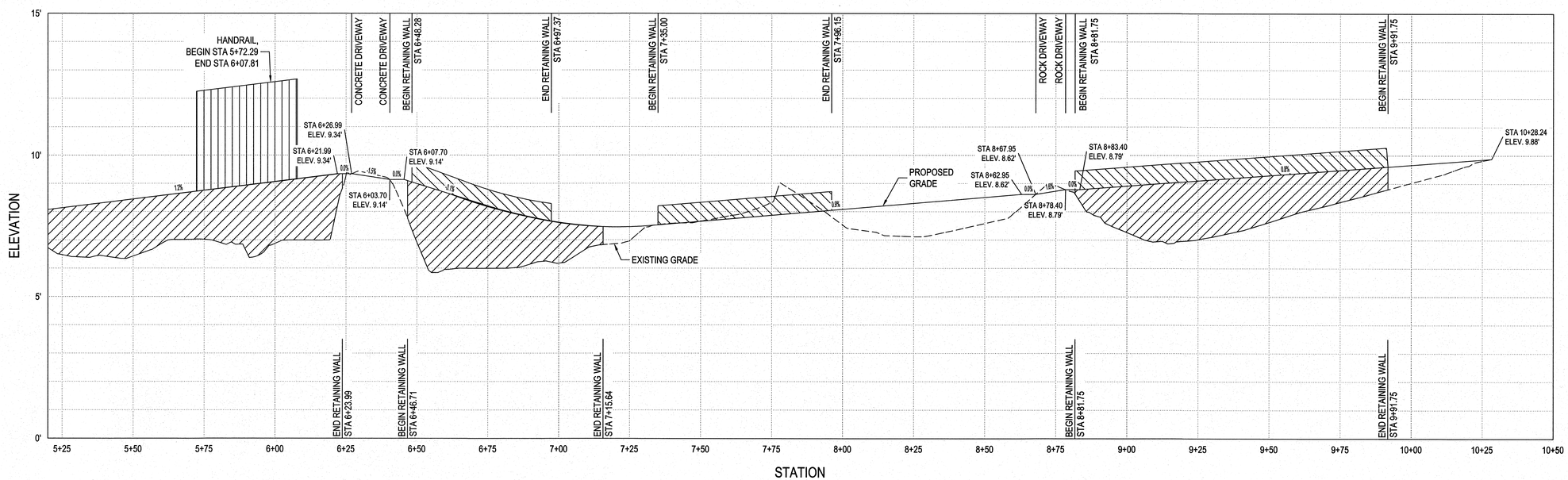

SIDEWALK CENTERLINE PROFILE - STA 5+20 - END

SCALE: H: 1" = 20'; V: 1" = 2'

THIS DRAWING IS THE PROPERTY OF ARENDELL ENGINEERS AND IS NOT TO BE REPRODUCED OR USED FOR ANY PROJECT IN WHOLE OR IN PART WITHOUT EXPRESS WRITTEN PERMISSION.

PROJECT MANAGER: JWF

DESIGNED: JJW

DRAWN BY: JJW

CHECKED: JWF

SCALE: AS SHOWN

DATE: 03/07/16

ARENDELL ENGINEERS
CIVIL · COASTAL · ENVIRONMENTAL
105 North 10th Street, Suite 4
Morehead City, NC 28557
(252) 622-4338
Fax: (252) 622-4505
www.arendellengineers.com
North Carolina Certification No. C-1509

OWNER:
TOWN OF PINE KNOLL SHORES
100 MUNICIPAL CIRCLE
PINE KNOLL SHORES, NC 28512

PROJECT:
ARBORVITAE TO MIMOSA SIDEWALK

CARTERET COUNTY, NC

DRAWING:
SIDEWALK CENTERLINE PLAN & PROFILE STA 5+20 - END

NORTH CAROLINA PROFESSIONAL SEAL 42158 ENGINEER JOSEPH WIDE
05/24/2016

NO.	REVISION	BY	DATE
1	NCDOT COMMENTS	JWF	05/24/16

SHEET NO:
C3

OF: 07

JOB NO. 15008

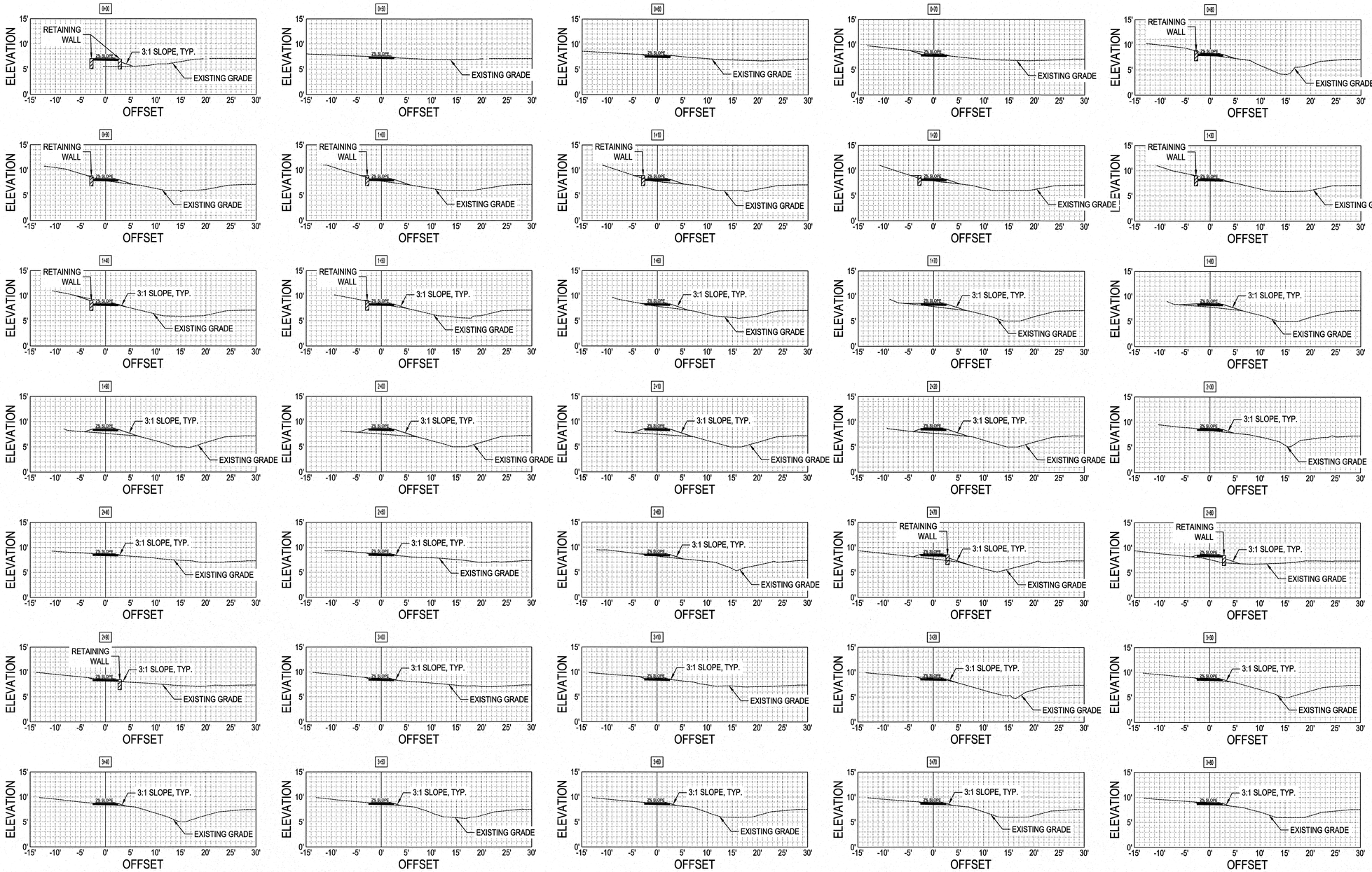

THIS DRAWING IS THE PROPERTY OF ARENDELL ENGINEERS AND IS NOT TO BE REPRODUCED OR USED FOR ANY PROJECT IN WHOLE OR IN PART WITHOUT EXPRESS WRITTEN PERMISSION.

PROJECT MANAGER: JWF

DESIGNED: JJW

DRAWN BY: JJW

CHECKED: JWF

SCALE: AS SHOWN

DATE: 03/07/16

ARENDELL ENGINEERS
CIVIL · COASTAL · ENVIRONMENTAL
105 North 10th Street, Suite 4
Morehead City, NC 28557
(252) 622-4338
Fax: (252) 622-4505
www.arendellengineers.com
North Carolina Certification No. C-1509

OWNER:

TOWN OF PINE KNOLL SHORES
100 MUNICIPAL CIRCLE
PINE KNOLL SHORES, NC 28512

PROJECT:

ARBORVITAE TO MIMOSA SIDEWALK

CARTERET COUNTY, NC

DRAWING:

SECTION VIEWS
SHEET 1 OF 3

NORTH CAROLINA PROFESSIONAL SEAL 42158 ENGINEER JOHN JOSEPH WADE
05/24/2016

NO.	REVISION	BY	DATE
1	NCDOT COMMENTS	JWF	05/24/16

SHEET NO:

C4

OF: 07

JOB NO. 15008

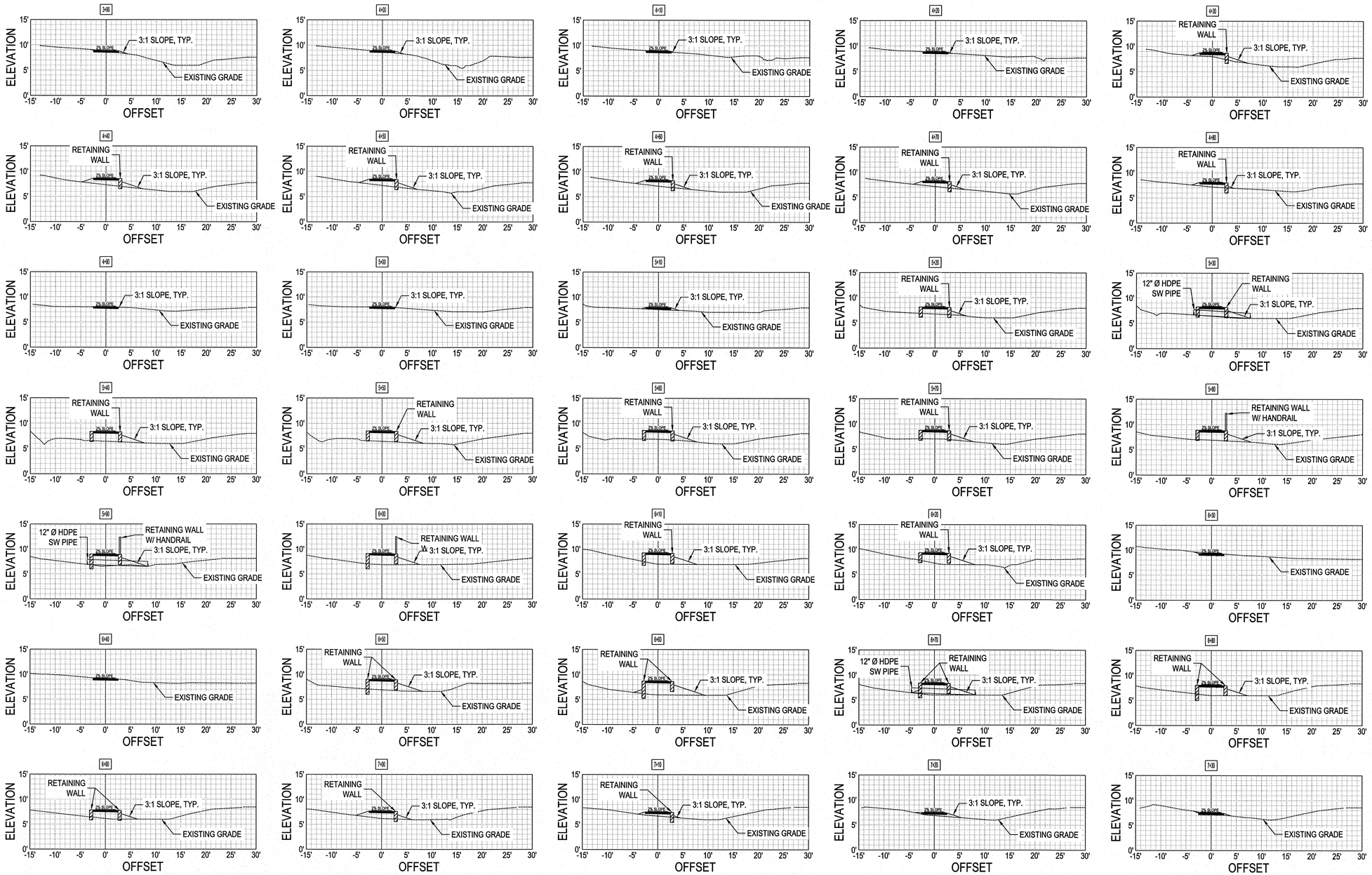

THIS DRAWING IS THE PROPERTY OF ARENDELL ENGINEERS AND IS NOT TO BE REPRODUCED OR USED FOR ANY PROJECT IN WHOLE OR IN PART WITHOUT EXPRESS WRITTEN PERMISSION.

PROJECT MANAGER: JWF

DESIGNED: JJW

DRAWN BY: JJW

CHECKED: JWF

SCALE: AS SHOWN

DATE: 03/07/16

ARENDELL ENGINEERS
CIVIL · COASTAL · ENVIRONMENTAL
105 North 10th Street, Suite 4
Morehead City, NC 28557
(252) 622-4338
Fax: (252) 622-4505
www.arendellengineers.com
North Carolina Certification No. C-1509

OWNER:

TOWN OF PINE KNOLL SHORES
100 MUNICIPAL CIRCLE
PINE KNOLL SHORES, NC 28512

PROJECT:

ARBORVITAE TO MIMOSA SIDEWALK

CARTERET COUNTY, NC

DRAWING:

SECTION VIEWS
SHEET 2 OF 3

NORTH CAROLINA PROFESSIONAL SEAL 42158 ENGINEER JOHN JOSEPH WADE
05/24/2016

NO.	REVISION	BY	DATE
1	NCDOT COMMENTS	JWF	05/24/16

SHEET NO:

C5

OF: 07

JOB NO. 15008

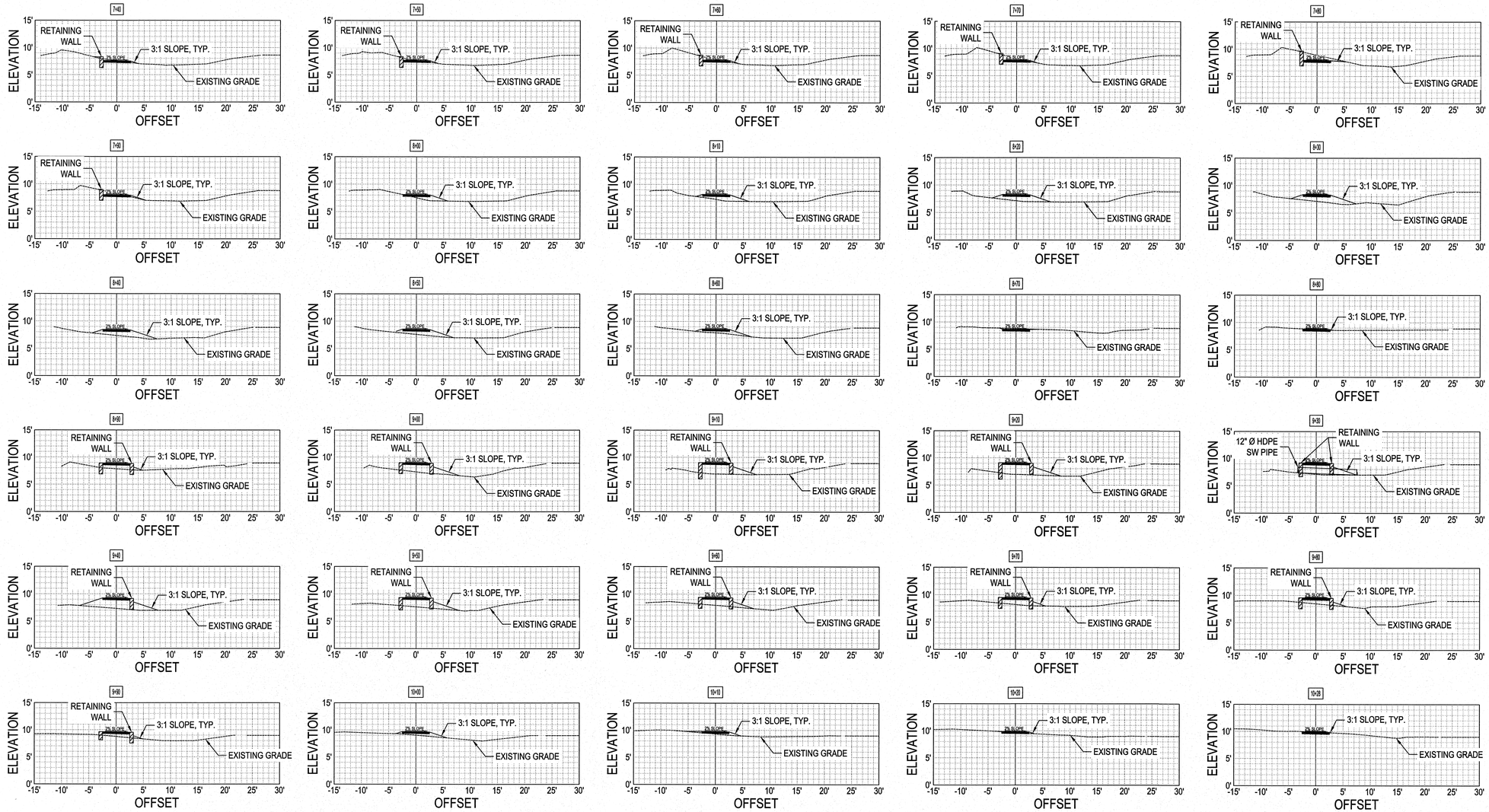

THIS DRAWING IS THE PROPERTY OF ARENDELL ENGINEERS AND IS NOT TO BE REPRODUCED OR USED FOR ANY PROJECT IN WHOLE OR IN PART WITHOUT EXPRESS WRITTEN PERMISSION.

PROJECT MANAGER: JWF

DESIGNED: JJW

DRAWN BY: JJW

CHECKED: JWF

SCALE: AS SHOWN

DATE: 03/07/16

ARENDELL ENGINEERS
CIVIL · COASTAL · ENVIRONMENTAL

105 North 10th Street, Suite 4
Morehead City, NC 28557
(252) 622-4338
Fax: (252) 622-4505

www.arendellengineers.com
North Carolina Certification No. C-1509

OWNER:

TOWN OF PINE KNOLL SHORES
100 MUNICIPAL CIRCLE
PINE KNOLL SHORES, NC 28512

PROJECT:

ARBORVITAE TO MIMOSA SIDEWALK

CARTERET COUNTY, NC

DRAWING:

SECTION VIEWS
SHEET 3 OF 3

NORTH CAROLINA PROFESSIONAL SEAL 42158 ENGINEER JOHN JOSEPH WADE
05/24/2016

NO.	REVISION	BY	DATE
1	NCDOT COMMENTS	JWF	05/24/16

SHEET NO:

C6

OF: 07

JOB NO. 15008

O:\Projects\2015\15008 PKS Sidewalk\dwg\15008sect05161.dwg, 5/25/2016 8:37:22 AM, AutoB, 1:1

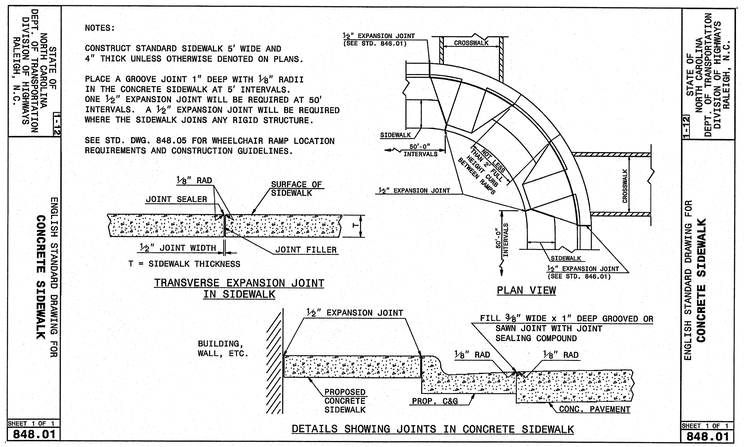

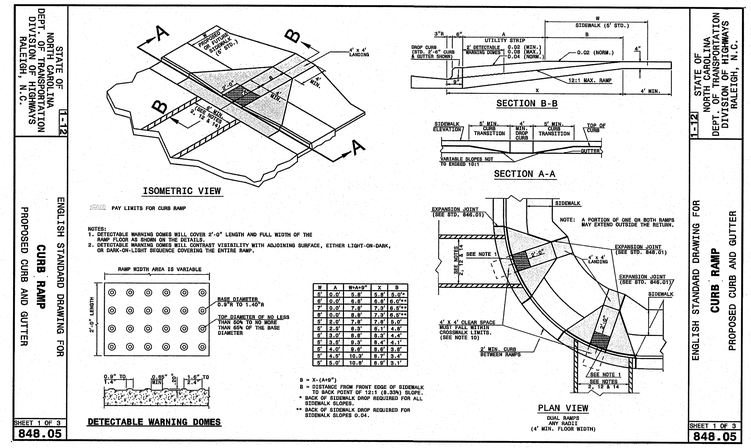

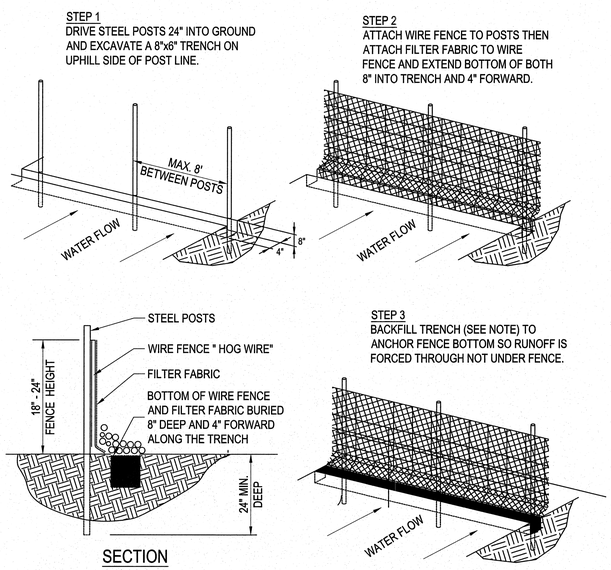

NOTES:
1. SEE EROSION CONTROL GENERAL NOTES.
2. FILTER FABRIC BOTTOM SHALL BE PLACED 8" IN TRENCH AND 4 " FORWARD AND SECURED BY EITHER WASHED STONE EXTENDING A MINIMUM OF 6" ABOVE GROUND LEVEL OR TAMPED SOIL BACKFILL MATERIAL TO GROUND LEVEL OR HIGHER.

TEMPORARY SILT FENCE

SCALE: NOT TO SCALE

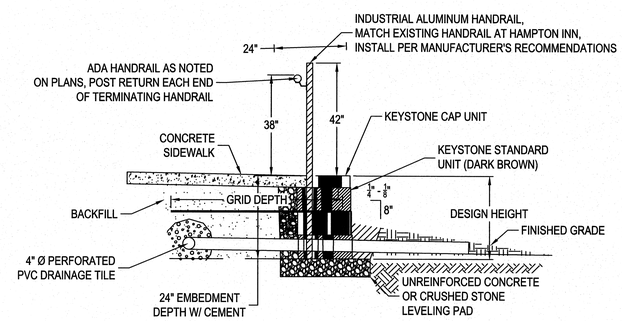

TYPICAL REINFORCED WALL SECTION

SCALE: NOT TO SCALE

THIS DRAWING IS THE PROPERTY OF ARENDELL ENGINEERS AND IS NOT TO BE REPRODUCED OR USED FOR ANY PROJECT IN WHOLE OR IN PART WITHOUT EXPRESS WRITTEN PERMISSION.

PROJECT MANAGER: JWF
DESIGNED: JJW
DRAWN BY: JJW
CHECKED: JWF
SCALE: AS SHOWN
DATE: 03/07/16

ARENDELL ENGINEERS
CIVIL · COASTAL · ENVIRONMENTAL
105 North 10th Street, Suite 4
Morehead City, NC 28557
(252) 622-4338
Fax: (252) 622-4505
www.arendellengineers.com
North Carolina Certification No. C-1509

OWNER:
TOWN OF PINE KNOLL SHORES
100 MUNICIPAL CIRCLE
PINE KNOLL SHORES, NC 28512

PROJECT:
ARBORVITAE TO MIMOSA SIDEWALK
CARTERET COUNTY, NC

DRAWING:
DETAILS

NORTH CAROLINA PROFESSIONAL SEAL 42158 ENGINEER JOHN JOSEPH WADE
05/24/2016

NO.	REVISION	BY	DATE
1	NCDOT COMMENTS	JWF	05/24/16

SHEET NO: C7
OF: 07
JOB NO. 15008

O:\Projects\2015\15008 PKS Sidewalk\dwg\15008base05161616.dwg, 5/25/2016 8:38:52 AM, JAcob, 1:1